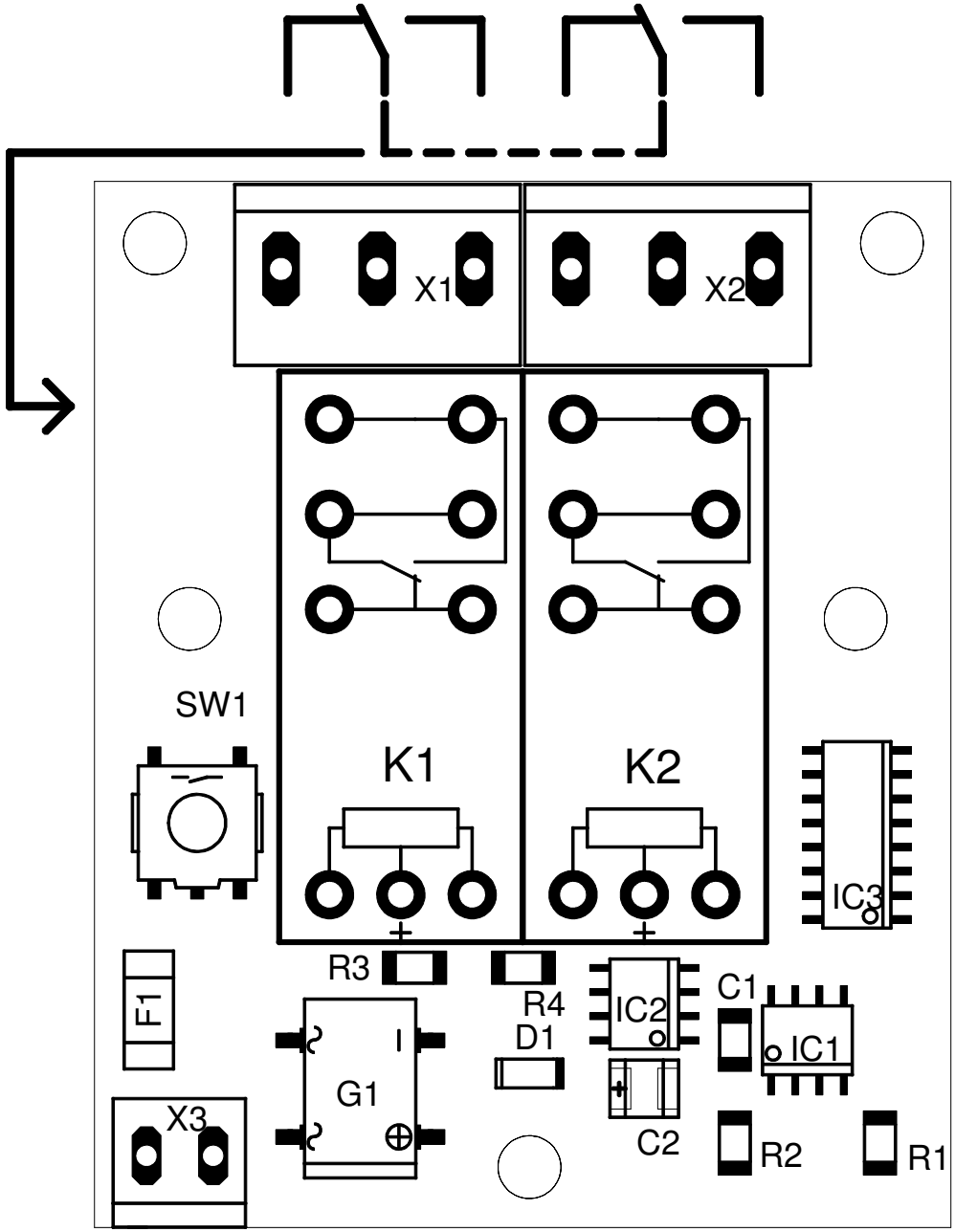

(c) www.digital-bahn.de - Sven Brandt

45 mm x 55 mm